Specifications on this page are subject to change without notice. Every attempt has been made to ensure the accuracy of this drawing; however, Traxxas cannot be held responsible for typographical or other errors.

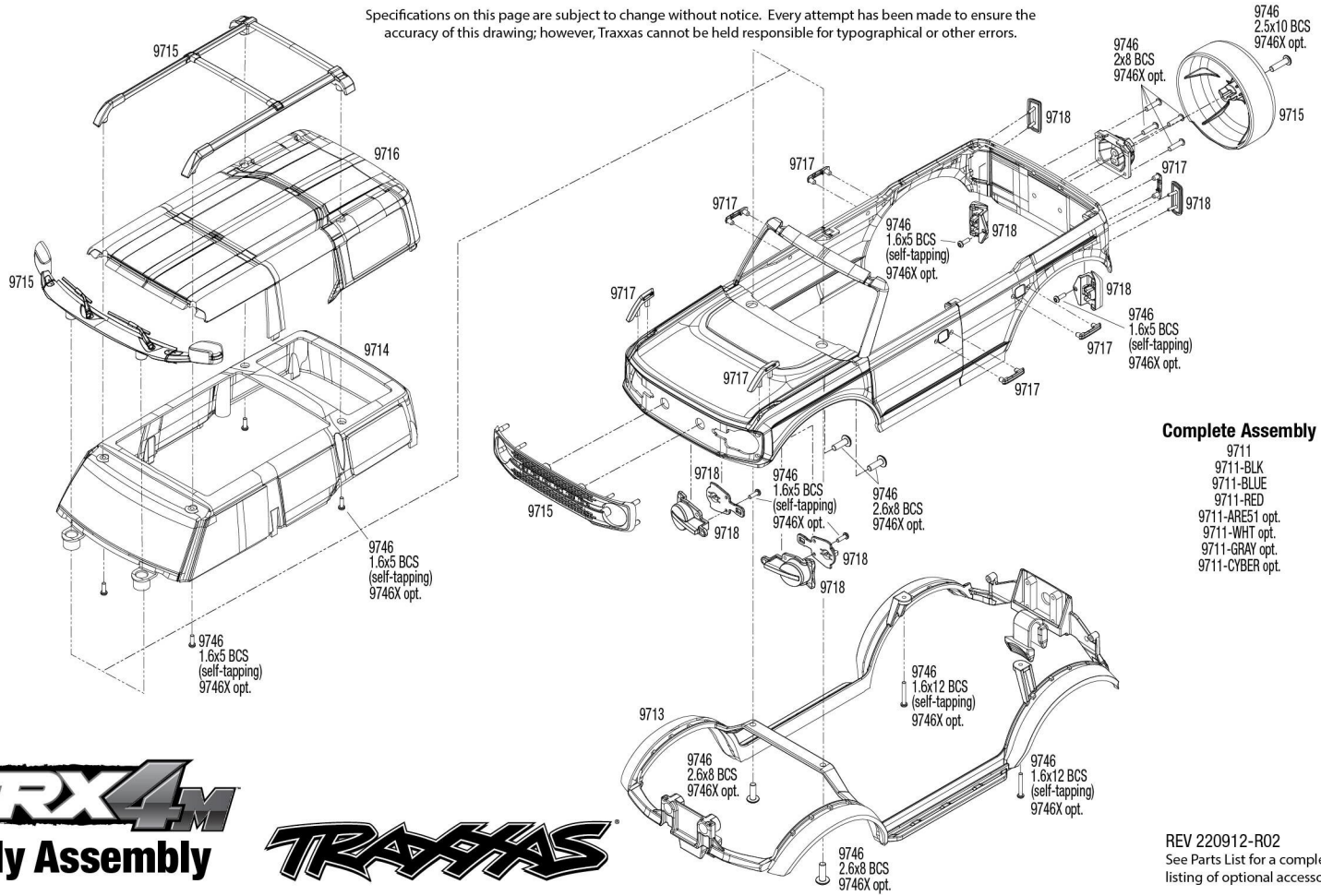

Complete Assembly

9711
9711-BLK
9711-BLUE
9711-RED
9711-ARE51 opt.
9711-WHT opt.
9711-GRAY opt.
9711-CYBER opt.

TRX4M

Body Assembly

TRAXXAS®

REV 220912-R02

See Parts List for a complete listing of optional accessories.