STAMPEDE 4X4 VXL BRUSHLESS

Rear Assembly

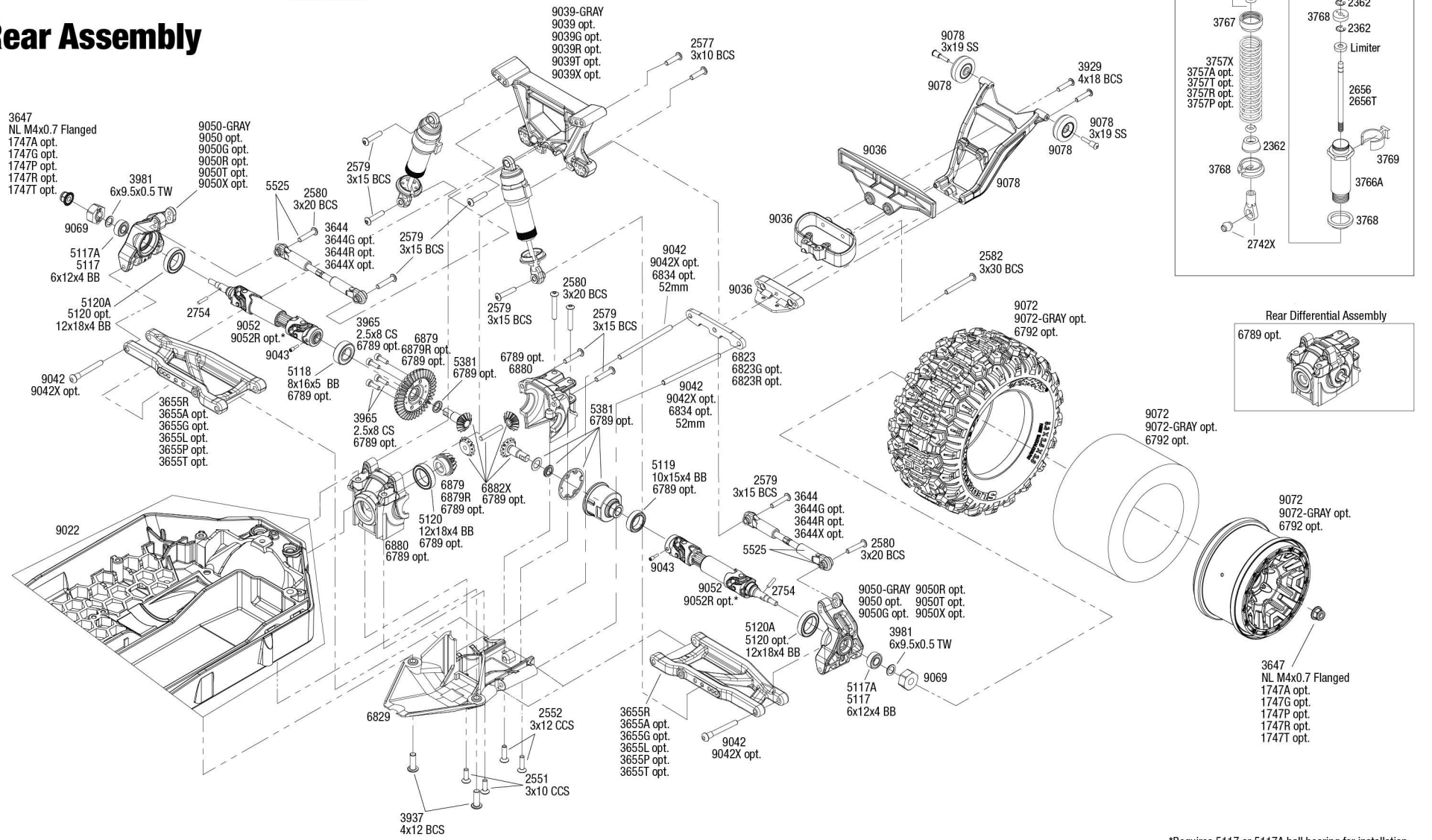

*Requires 5117 or 5117A ball bearing for installation.

TRAXXAS®

See Parts List for a complete listing of optional accessories.

REV 240521-R02

Specifications on this page are subject to change without notice. Every attempt has been made to ensure the accuracy of this drawing; however, Traxxas cannot be held responsible for typographical or other errors.