# Transmission Assembly

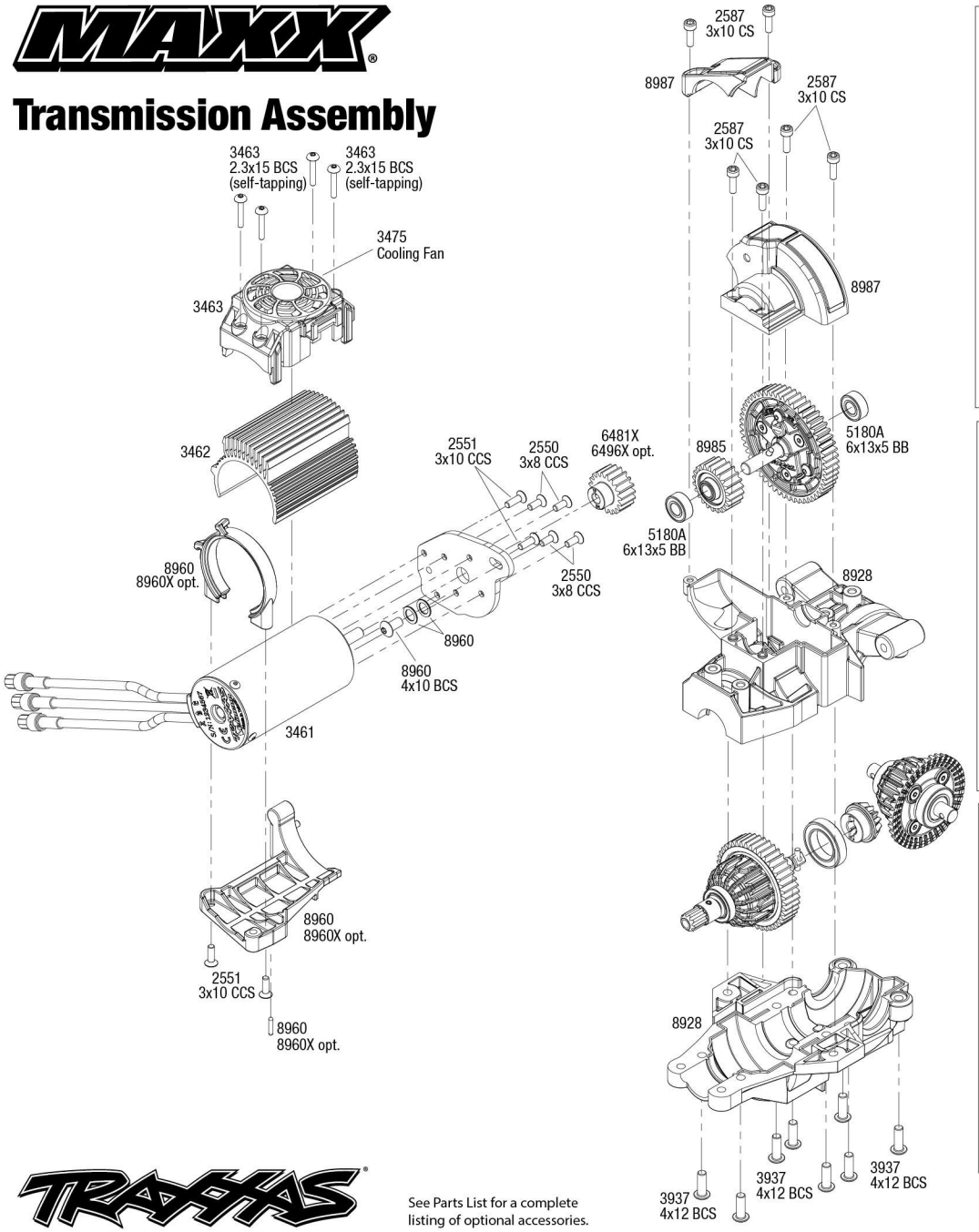


## Center Differential Assembly

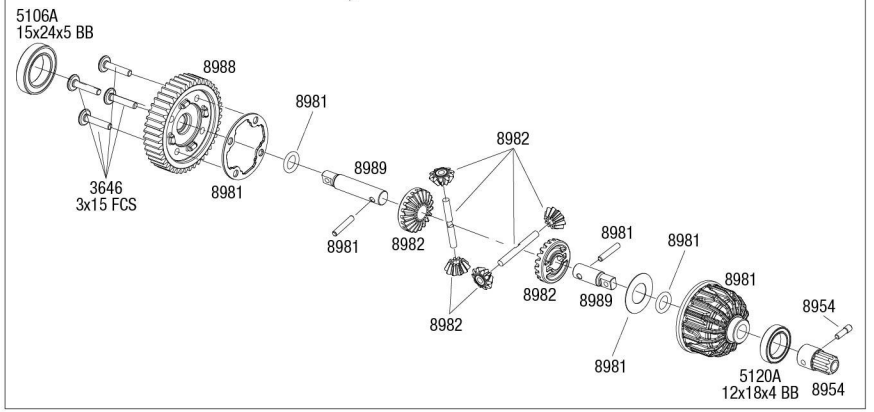


## Cush Drive Assembly

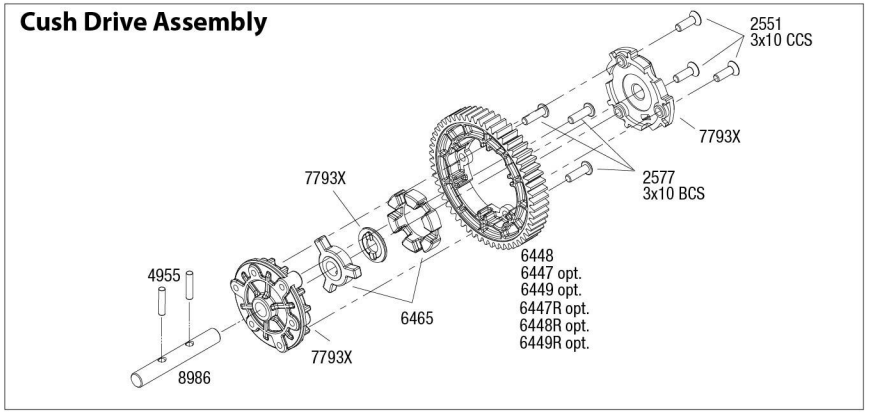


## Front & Rear Driveshaft Assembly

**Available fully assembled as part #8996**

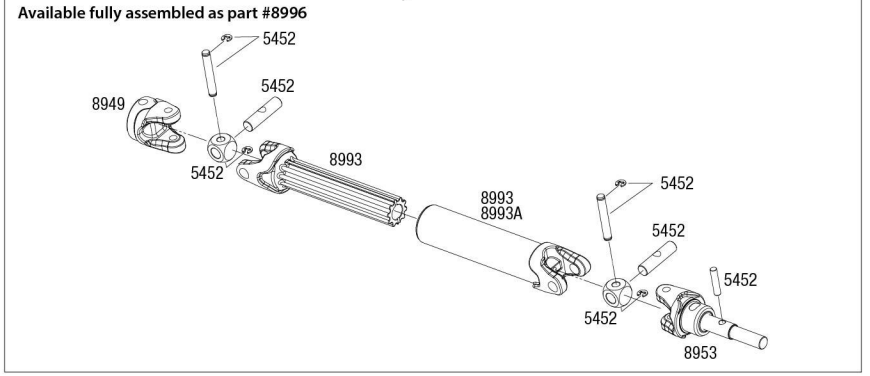


See Parts List for a complete listing of optional accessories.

REV 220523-R03

Specifications on this page are subject to change without notice. Every attempt has been made to ensure the accuracy of this drawing; however, Traxxas cannot be held responsible for typographical or other errors.