Body Assembly

7813
7816

7813
7814

7891-BLUE
7891-GRN
7869-BLUE opt.
7869-GRN opt.
7869X opt.
7812 opt.

7813
7814

7813
7823

7813
7824

2584
3x12 CS

2584
3x12 CS

2584
3x12 CS

2584
3x12 CS

2584
3x12 CS

2584
3x12 CS

2584
3x12 CS

2584
3x12 CS

2584
3x12 CS

2584
3x12 CS

2584
3x12 CS

Completed Assembly (view from top)

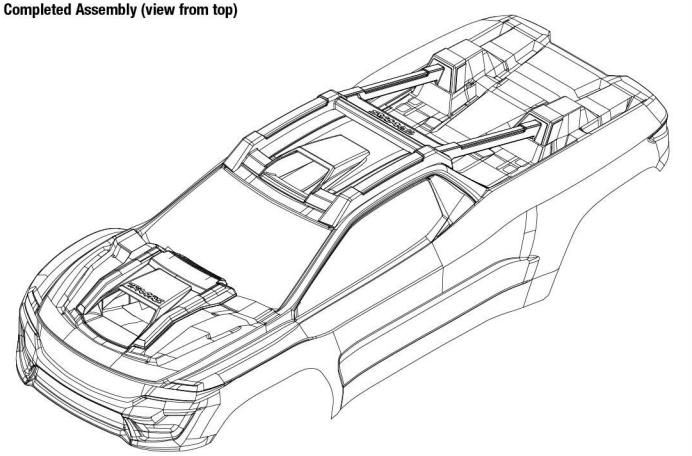

Completed Assembly (view from bottom)

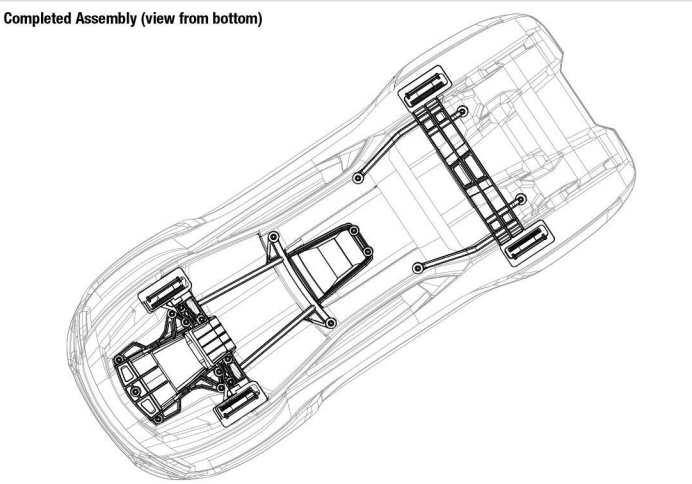

Specifications on this page are subject to change without notice. Every attempt has been made to ensure the accuracy of this drawing; however, Traxxas cannot be held responsible for typographical or other errors.

See Parts List for a complete listing of optional accessories.

REV 250522-R12