Body Assembly

7713X
7715
3646
3x15 FCS

7715

7715

4859
3x10 FCS

7710
7711T
7811
7811G
7811R

7715

4859
3x10 FCS

7715
2579
3x15 BCS

7710 7811G
7711T 7811R
7811

7710
7711T
7811
7811G
7811R

4859
3x10 FCS

7710

4859
3x10 FCS

4859
3x10 FCS

4859
3x10 FCS

7710

7710
7711T
7811
7811G
7811R

7710

7711T
7811
7811G
7811R
7711 opt.
7711X opt.

7715
3642X
3x15 CSS

7715

7715
3642X
3x15 CSS

7713X
7711T
7811
7811G
7811R

7715

7713X
2586
3x15 CS

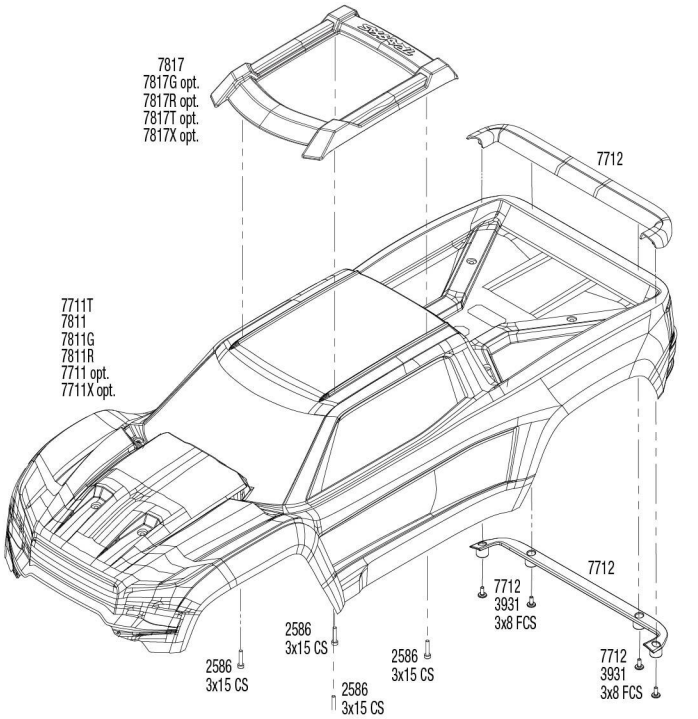

Completed Assembly (view from bottom)

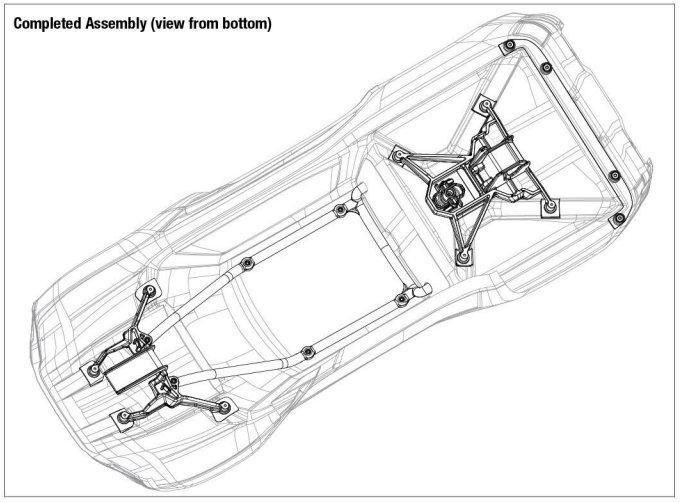

Specifications on this page are subject to change without notice. Every attempt has been made to ensure the accuracy of this drawing; however, Traxxas cannot be held responsible for typographical or other errors.

See Parts List for a complete listing of optional accessories.

REV 240501-R03