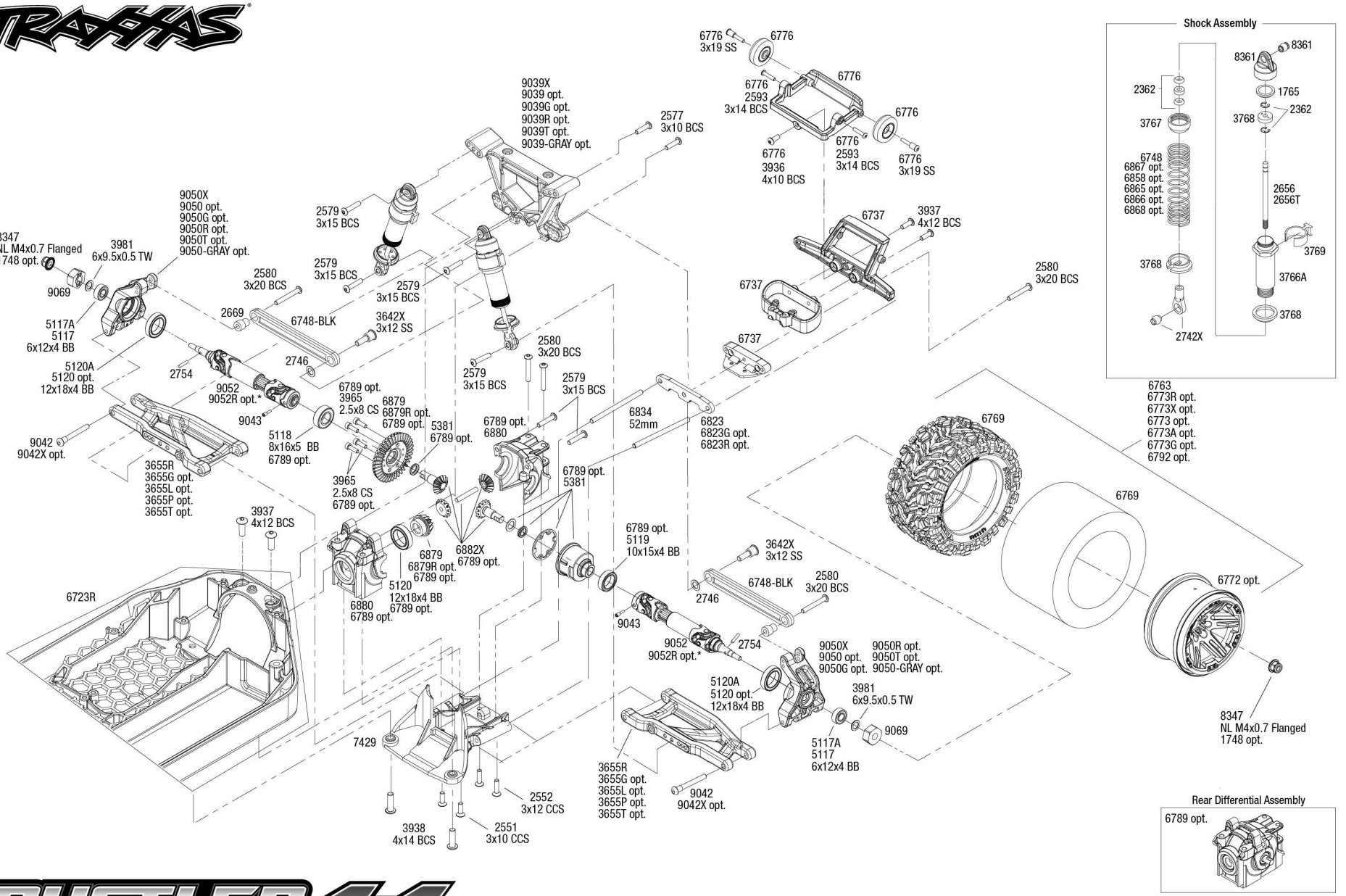

RUSTLER 4x4 BRUSHLESS

Rear Assembly

*Requires 5117 or 5117A ball bearing for installation.

See Parts List for a complete listing of optional accessories.

REV 230927-R02

Specifications on this page are subject to change without notice. Every attempt has been made to ensure the accuracy of this drawing; however, Traxxas cannot be held responsible for typographical or other errors.