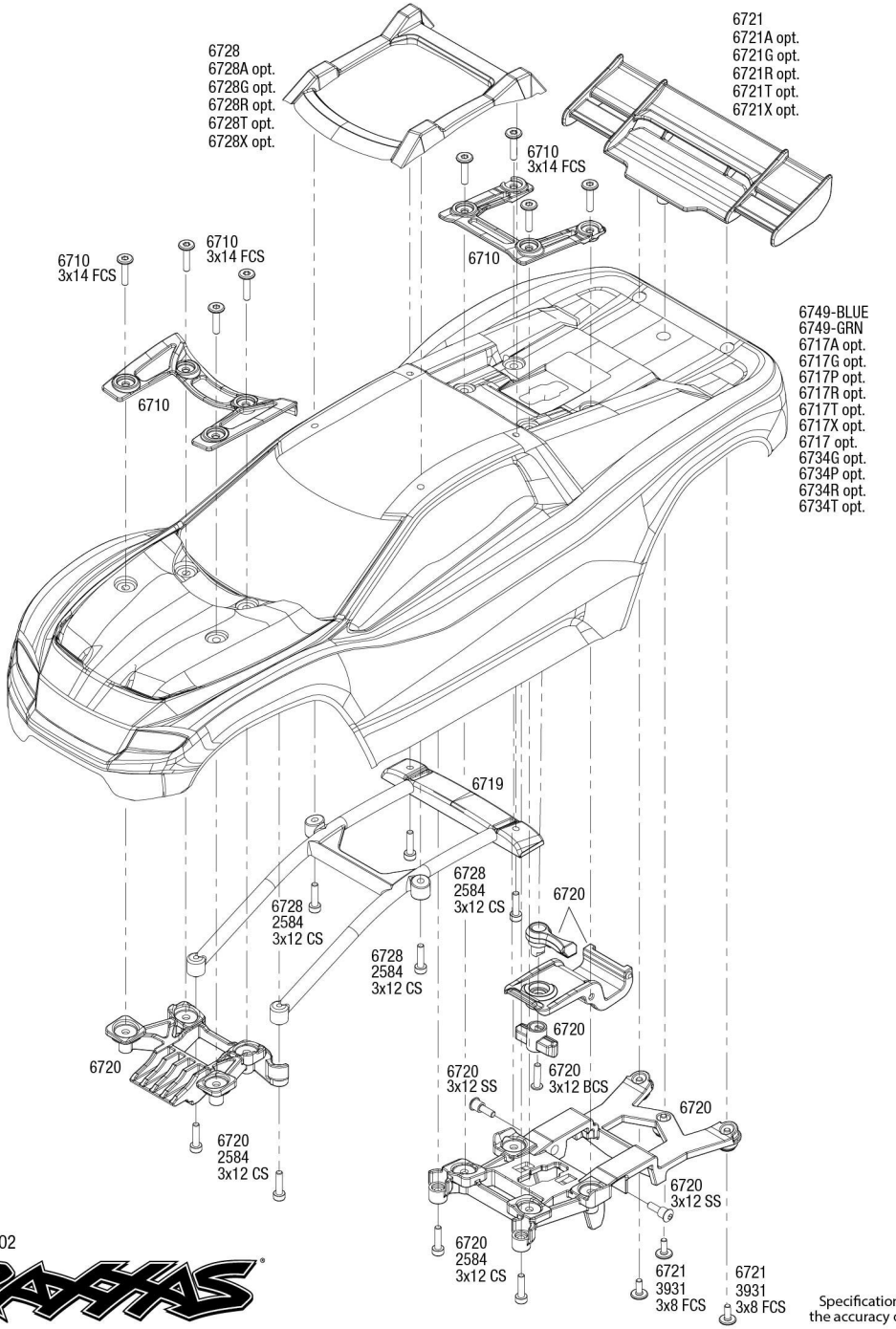

RUSTLER 4x4 ULTIMATE

Body Assembly

Completed Assembly (view from bottom)

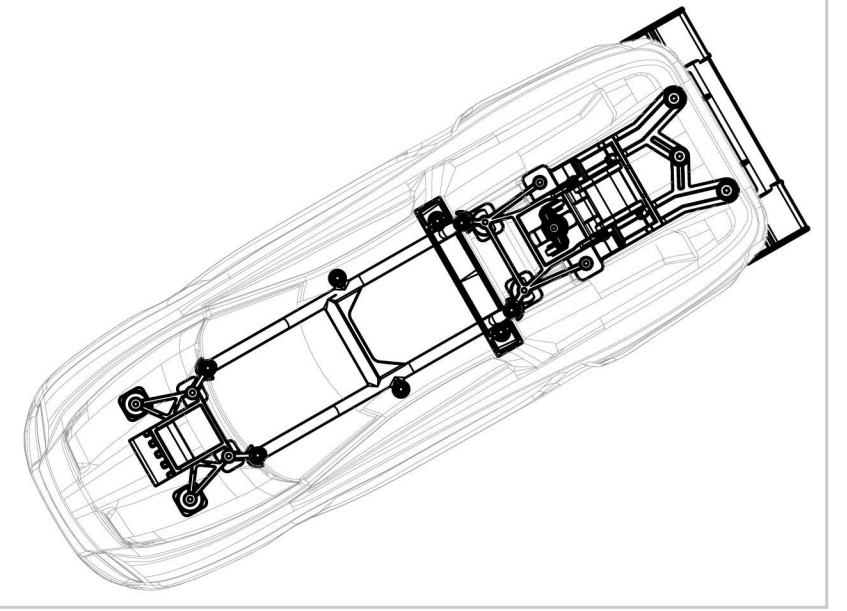

REV 230809-R02

TRAXXAS®

Specifications on this page are subject to change without notice. Every attempt has been made to ensure the accuracy of this drawing; however, Traxxas cannot be held responsible for typographical or other errors.

See Parts List for a complete listing of optional accessories.