Body Assembly

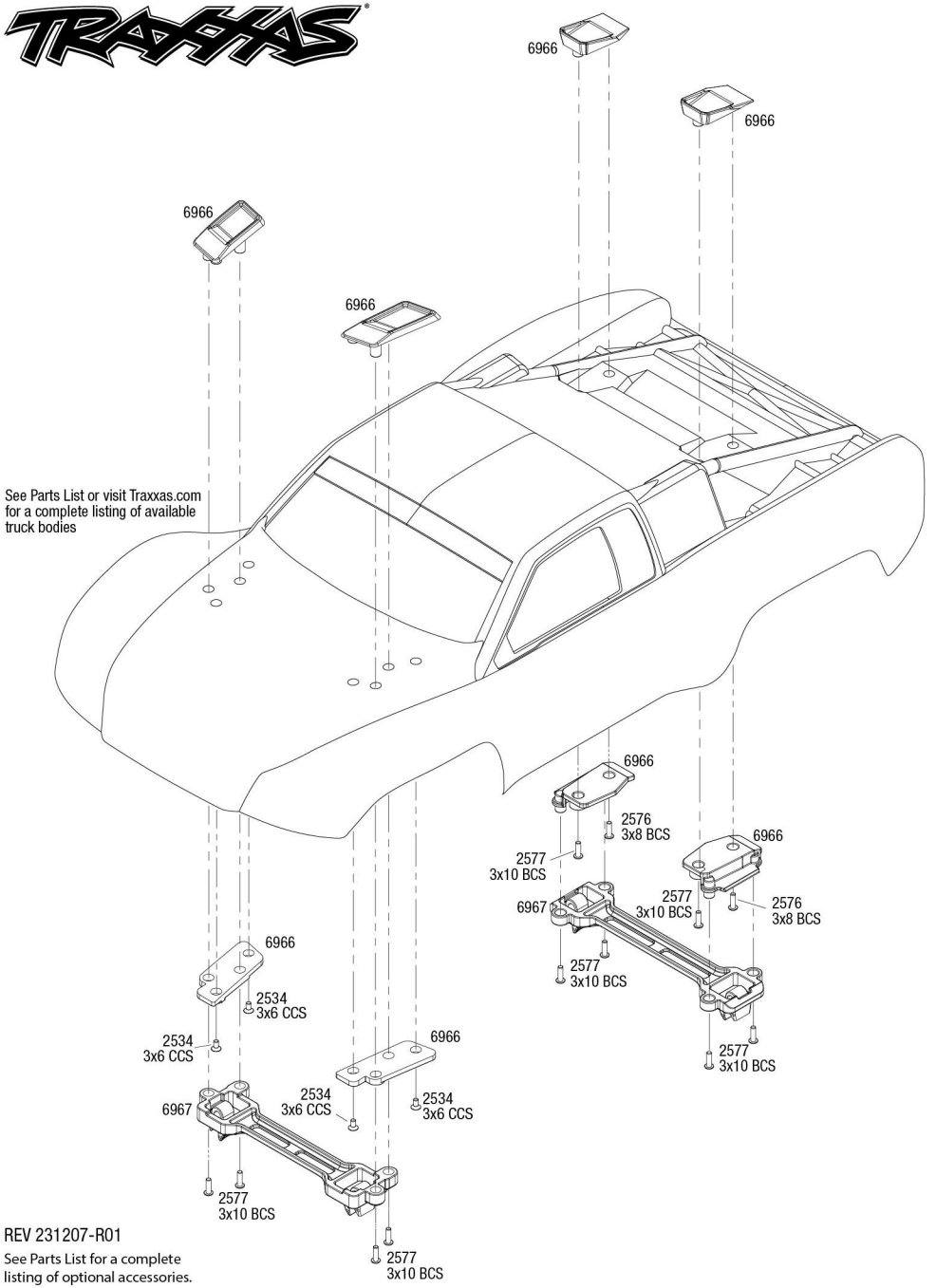

REV 231207-R01

See Parts List for a complete listing of optional accessories.

Completed Assembly (view from top)

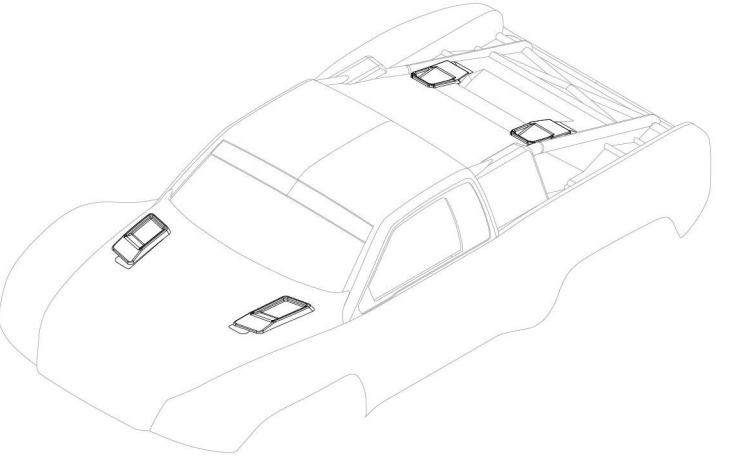

Completed Assembly (view from bottom)

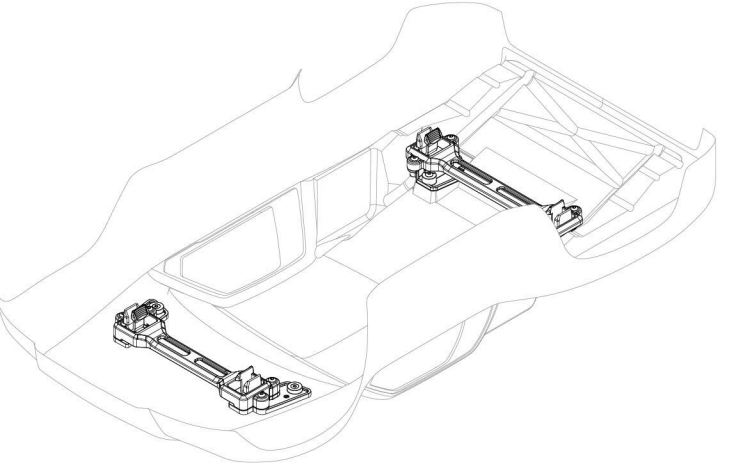

Specifications on this page are subject to change without notice. Every attempt has been made to ensure the accuracy of this drawing; however, Traxxas cannot be held responsible for typographical or other errors.