# MINI RALLY VXL

## Front Assembly

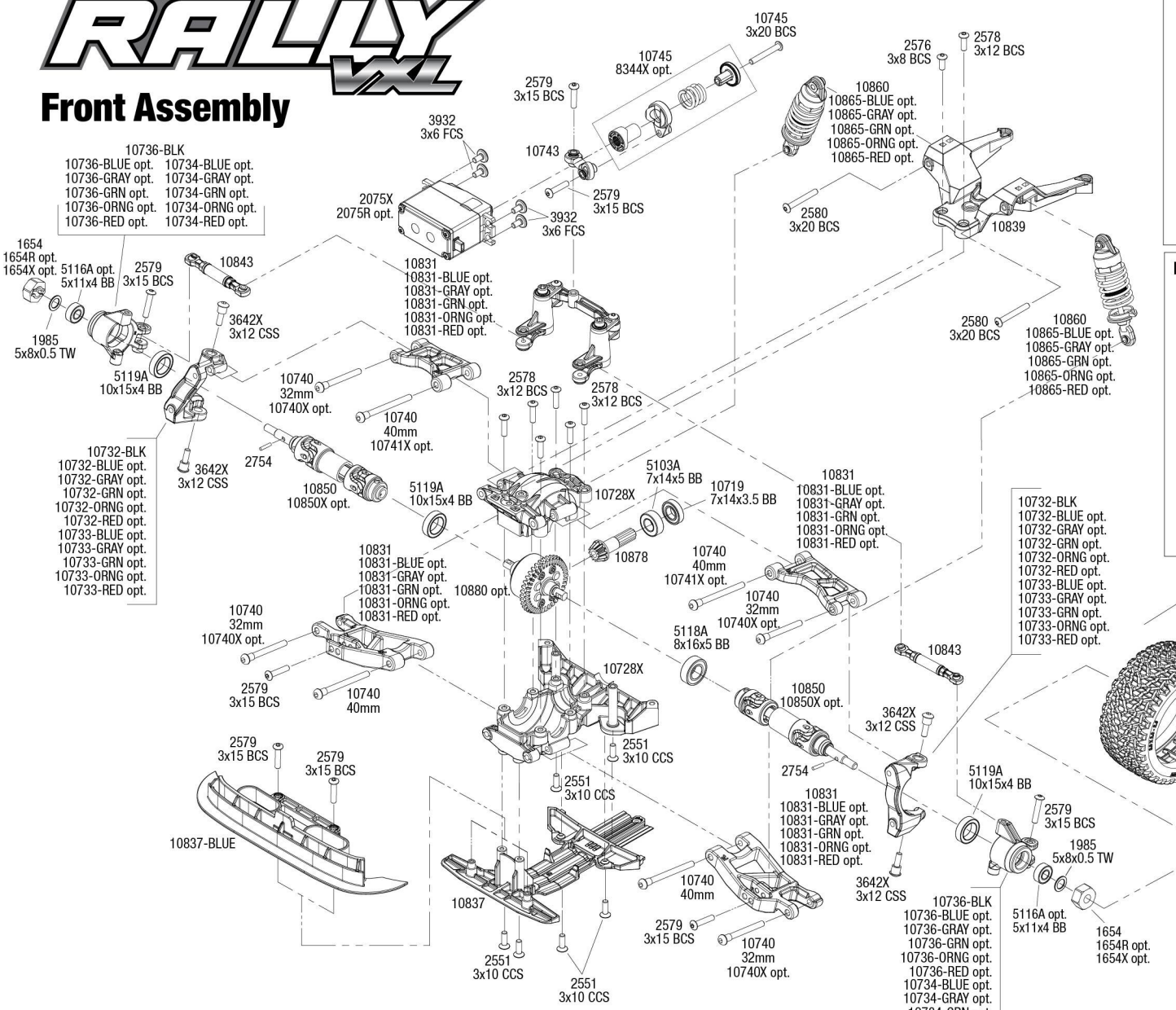


### Steering Assembly

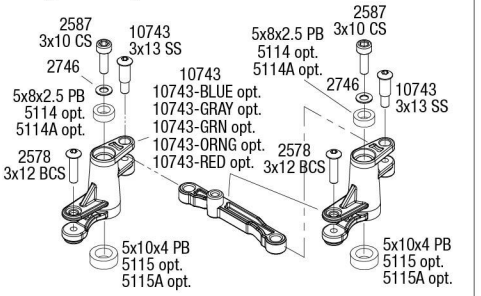


### Front & Rear Differential Assembly

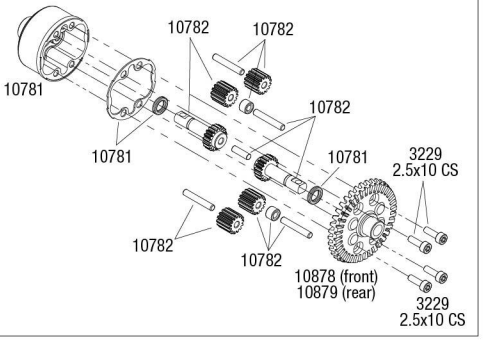


REV 251016-R01

See Parts List for a complete listing of optional accessories.

Specifications on this page are subject to change without notice. Every attempt has been made to ensure the accuracy of this drawing; however, Traxxas cannot be held responsible for typographical or other errors.

TRAXXAS®