DISRUPTOR

Chassis Assembly

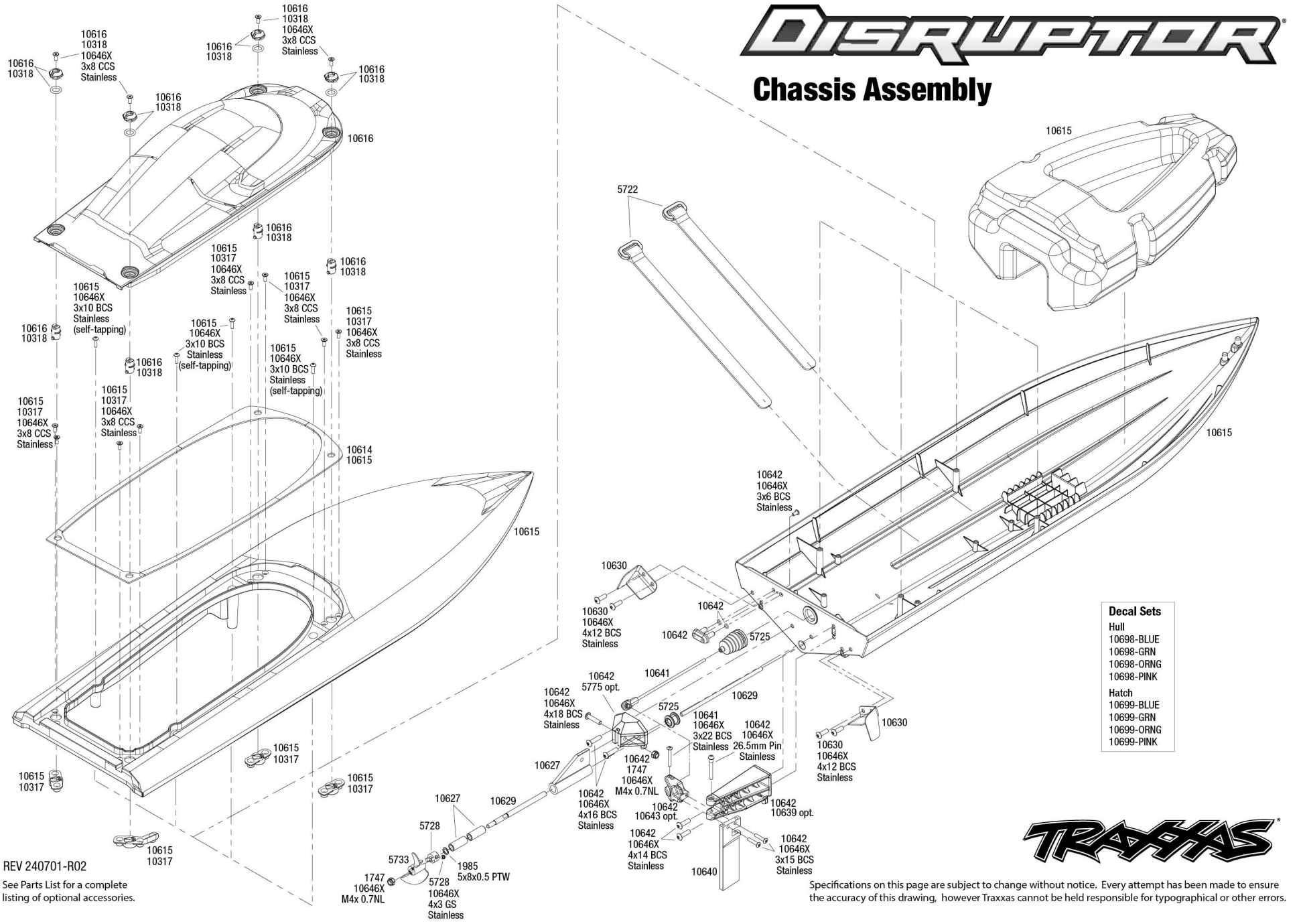
10616
10318
10646X
3x8 CCS
Stainless
10616
10318
10616
10318
10616
10318