# NISSAN 240SX

## Rear Assembly

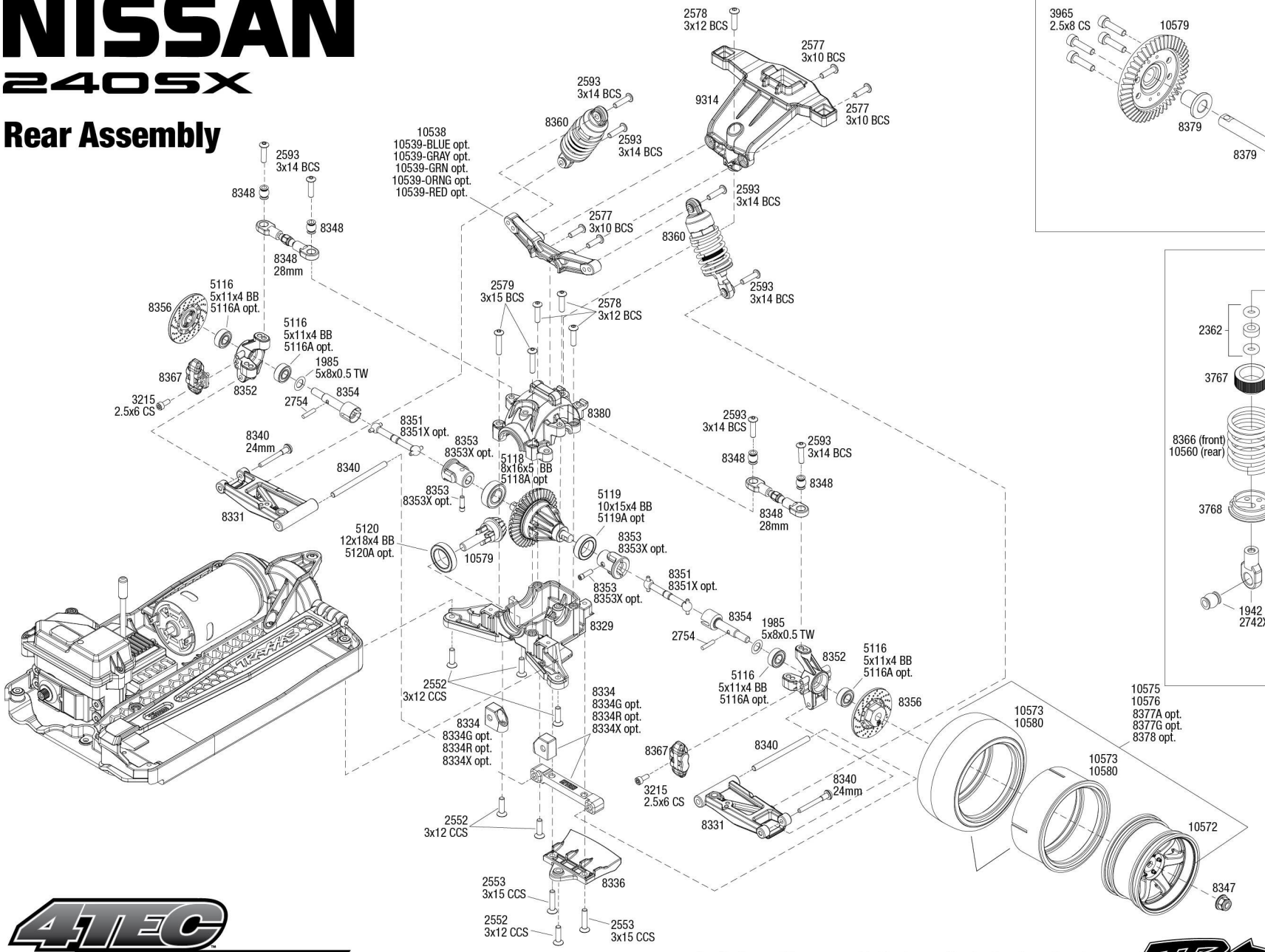


### Spool Assembly

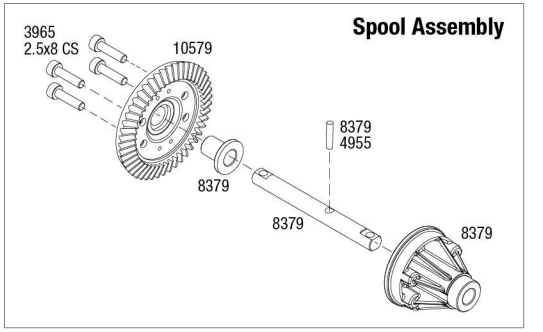


### Shock Assembly

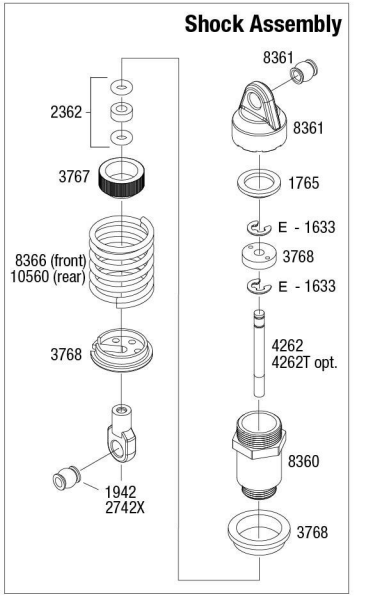


REV 250905-R00

See Parts List for a complete listing of optional accessories.

Specifications on this page are subject to change without notice. Every attempt has been made to ensure the accuracy of this drawing; however, Traxxas cannot be held responsible for typographical or other errors.