MAXX SLASH

Body Assembly

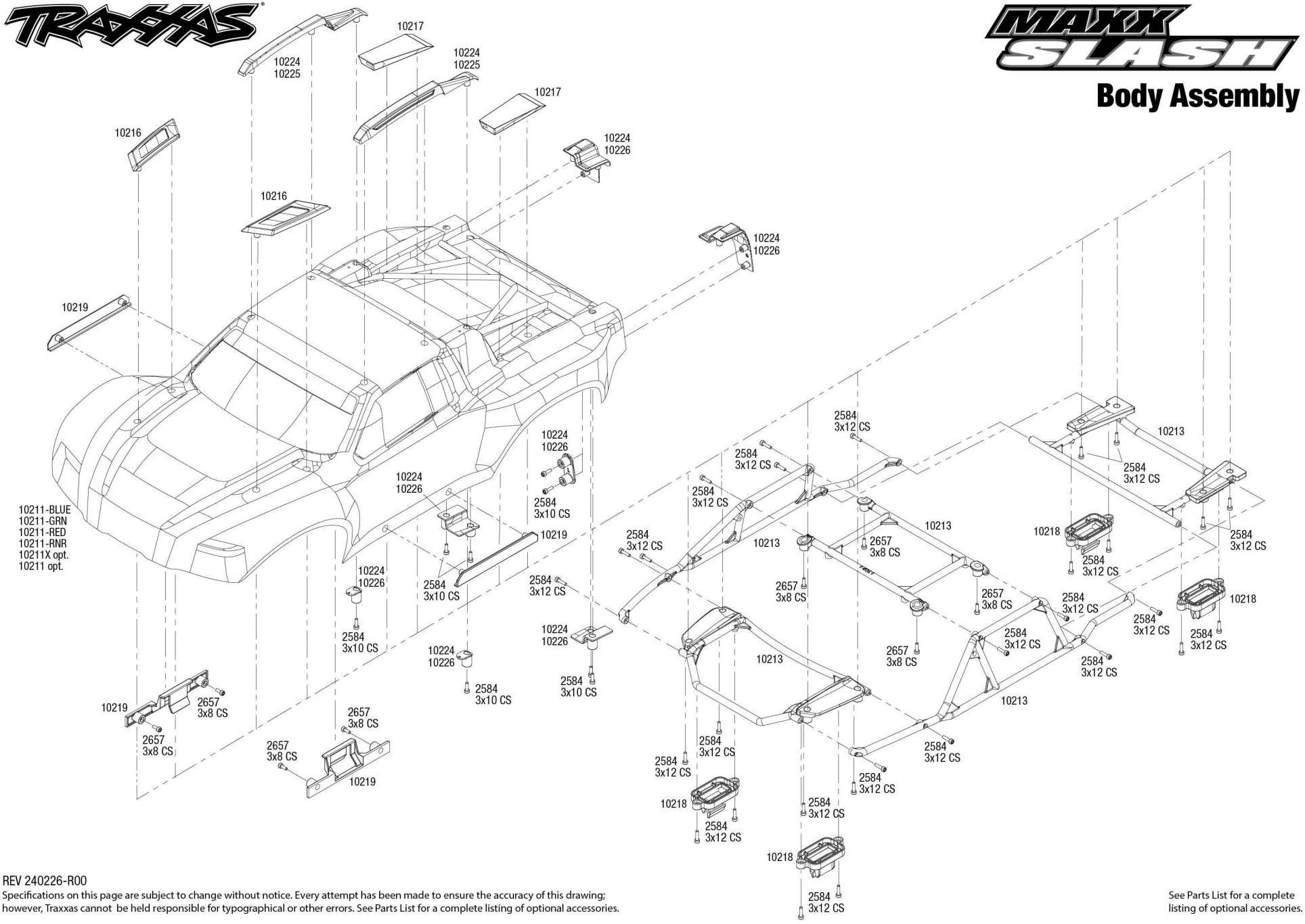

REV 240226-R00

Specifications on this page are subject to change without notice. Every attempt has been made to ensure the accuracy of this drawing; however, Traxxas cannot be held responsible for typographical or other errors. See Parts List for a complete listing of optional accessories.

See Parts List for a complete listing of optional accessories.