TRAXXAS BIGFOOT®

Body Accessories Installation Instructions

Covers Part #3662

Visite la página TRAXXAS.com/manuals para descargar el instructiones en su idioma.

Auf TRAXXAS.com/manuals können Sie anleitung in Ihrer Sprache downloaden.

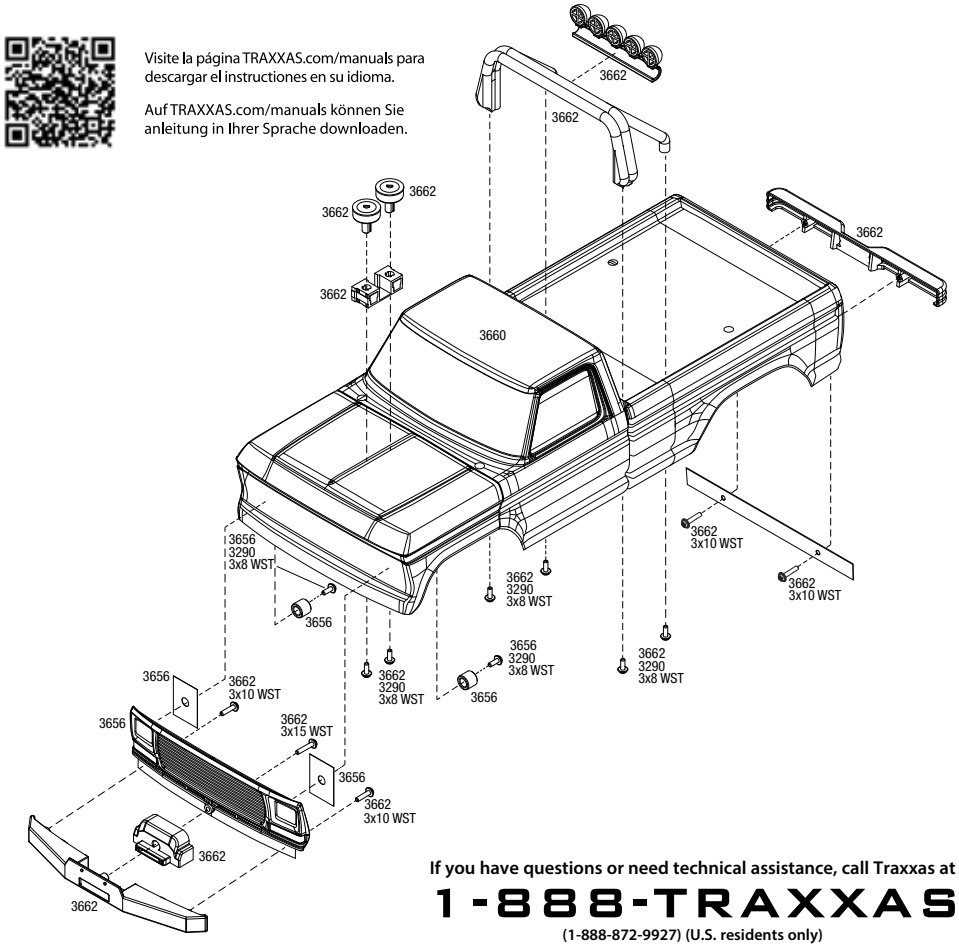

If you have questions or need technical assistance, call Traxxas at

1-888-TRAXXAS

(1-888-872-9927) (U.S. residents only)

Completed Assembly (view from top)

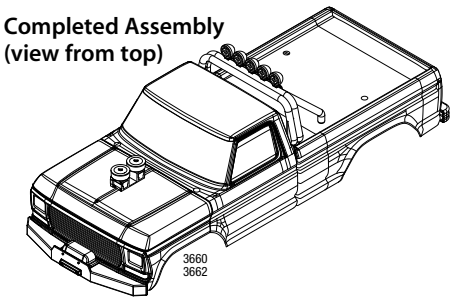

Completed Assembly (view from bottom)

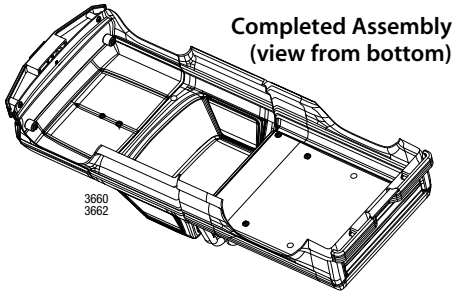

TRAXXAS.com

Traxxas, 6250 Traxxas Way, McKinney, TX 75070, Phone: 972-549-3000, Fax: 972-549-3011, e-mail: support@Traxxas.com

KC2479-R01 Rev 161219

TRAXXAS BIGFOOT®

Body Accessories Installation Instructions

Covers Part #3662

Visite la página TRAXXAS.com/manuals para descargar el instructiones en su idioma.

Auf TRAXXAS.com/manuals können Sie anleitung in Ihrer Sprache downloaden.

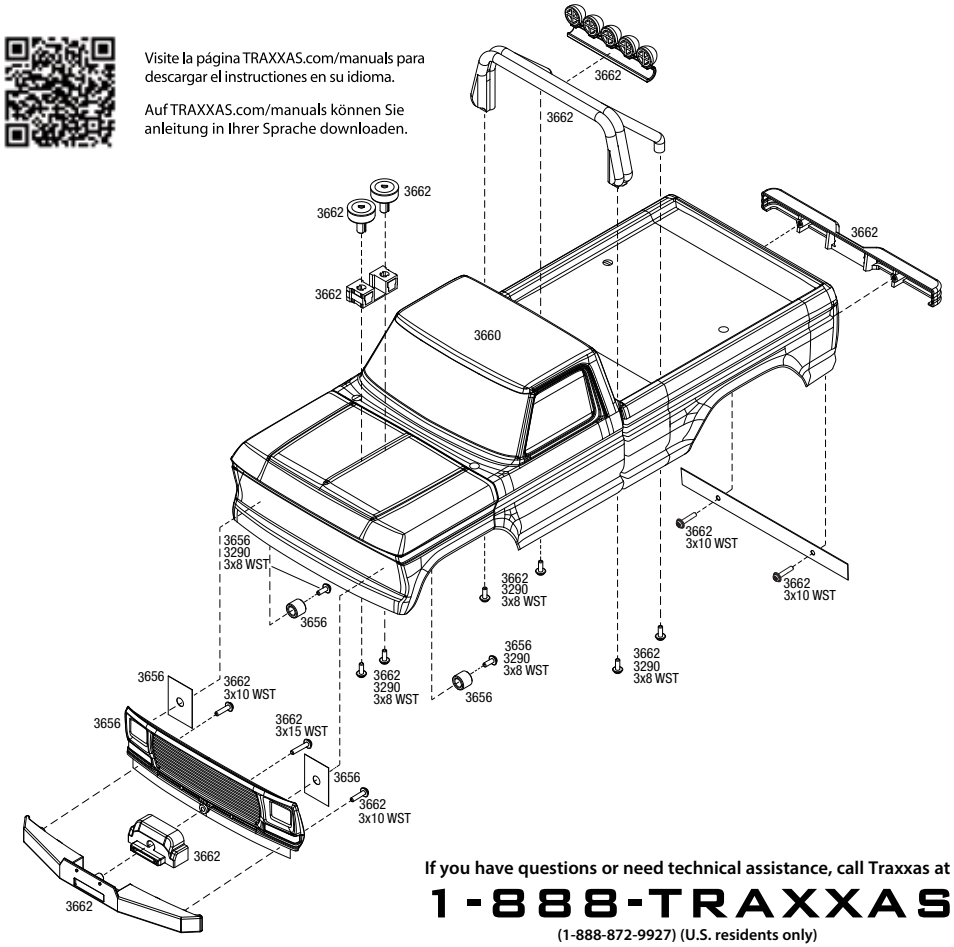

If you have questions or need technical assistance, call Traxxas at

1-888-TRAXXAS

(1-888-872-9927) (U.S. residents only)

Completed Assembly (view from top)

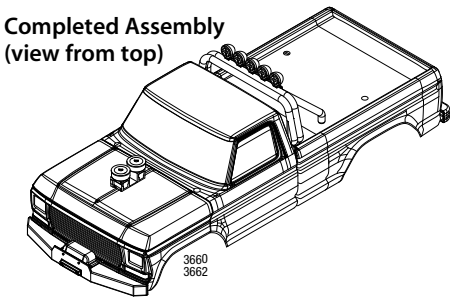

Completed Assembly (view from bottom)

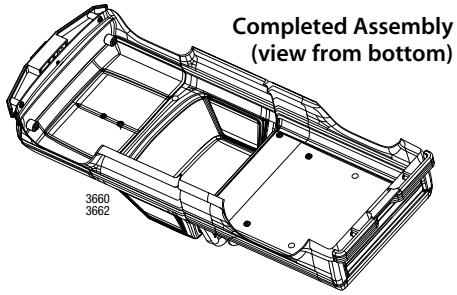

TRAXXAS.com

Traxxas, 6250 Traxxas Way, McKinney, TX 75070, Phone: 972-549-3000, Fax: 972-549-3011, e-mail: support@Traxxas.com

KC2479-R01 Rev 161219